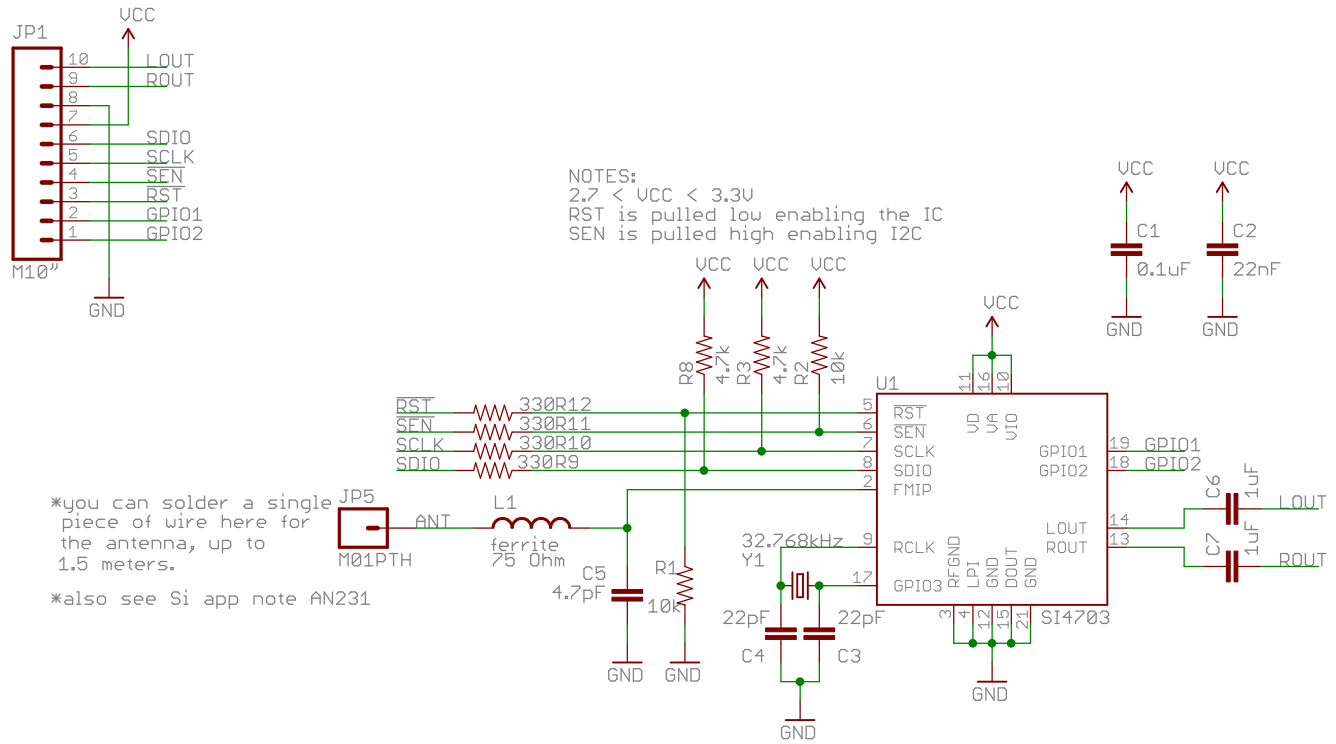

TITLE: Si470x-breakout-v13 | SFE | SFE

Document Number: | REV:

Date: not saved! | Sheet: 1/1

open hardware

Released under the Creative Commons Attribution Share-Alike 3.0 License
http://creativecommons.org/licenses/by-sa/3.0
Design by: A. Weiss