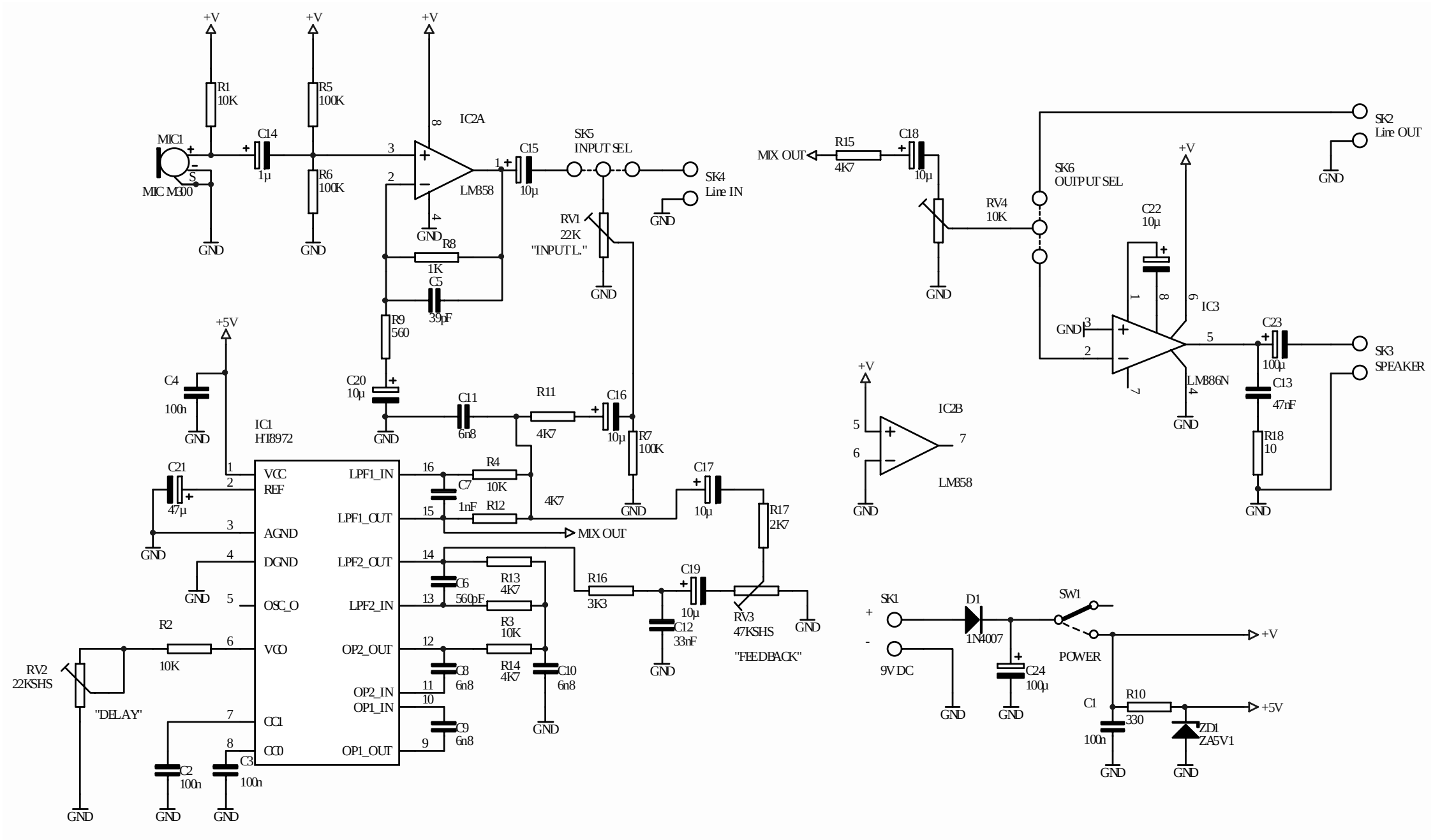
+V
R1
10K
R5
100K
IC2A
MIC1
MIC M300
C14
1µ
R6
100K
LM358
C15
10µ
SK5
INPUT SEL
SK4
Line IN
GND
RV1
22K
"INPUT L."
R8
1K
C5
39pF
R9
560
+5V
C4
100n
C20
10µ
C11
6n8
R11
4K7
C16
10µ
R7
100K
IC1
HT8972
C21
47µ
VCC
REF
AGND
DGND
OSC_O
VCO
CC1
CC0
LPF1_IN
LPF1_OUT
LPF2_OUT
LPF2_IN
OP2_OUT
OP2_IN
OP1_IN
OP1_OUT
R4
10K
C7
1nF
R12
4K7
MIX OUT
C17
10µ
R17
2K7
R13
4K7
C6
560pF
R3
10K
R14
4K7
C8
6n8
C10
6n8
C9
6n8
R16
3K3
C19
10µ
C12
33nF
RV3
47KSHS
"FEEDBACK"
R2
10K
RV2
22KSHS
"DELAY"
C2
100n
C3
100n
MIX OUT
R15
4K7
C18
10µ
RV4
10K
SK6
OUTPUT SEL
SK2
Line OUT
C22
10µ
IC3
LM886N
C23
100µ
C13
47nF
R18
10
SK3
SPEAKER
IC2B
LM358
SK1
9V DC
D1
1N4007
C24
100µ
SW1
POWER
C1
100n
R10
330
ZD1
ZA5V1